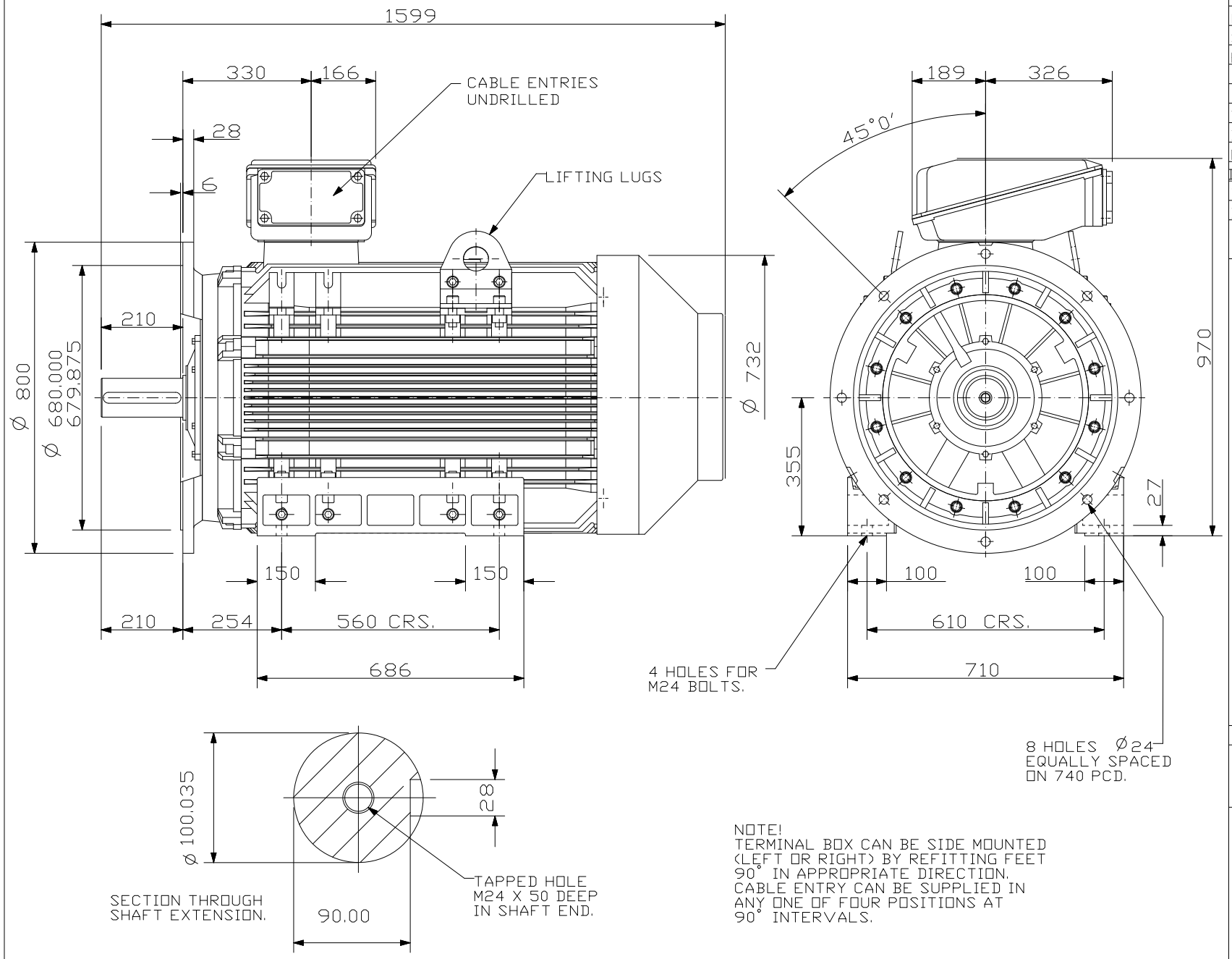

NOTE!
TERMINAL BOX CAN BE SIDE MOUNTED (LEFT OR RIGHT) BY REFITTING FEET 90° IN APPROPRIATE DIRECTION. CABLE ENTRY CAN BE SUPPLIED IN ANY ONE OF FOUR POSITIONS AT 90° INTERVALS.

CUSTOMER		
ORDER No.		
SERIAL No.		
FRAME SIZE		
KW	R.P.M.	
Hz	PHASE 3	
VOLTS	POLES	
BRGS. D.E	N.D.E	
MOTOR NETT. WT.	Kg.	
INSULATION CLASS		
TEMPERATURE RISE		°C
DESIGN AMBIENT TEMPERATURE		°C
HEATER WATTS & VOLTS (IF FITTED) - WATTS, - VOLTS		
REMARKS		

ALL DIMENSIONS IN MILLIMETRES

FIRST ANGLE PROJECTION

BROOK CROMPTON

NOTE!
2.5 ENDPLAY WILL BE PROVIDED FOR ENDTHRUST PROTECTION WHEN CUSTOMERS NOTIFY US OF THEIR INTENTION TO USE RIGID COUPLINGS AND DRIVEN MACHINES WITHOUT ENDPLAY.

OUTLINE DIMENSIONS OF STANDARD FOOT MOUNTED METRIC A.C. MOTOR TO BS4999 PART 141, WITH "D" FLANGE AT DRIVE END.
TOTALLY ENCLOSED FAN VENTILATED.
FRAME SIZE:- W-DF355M-H 4-POLE UP.

SCALE	1:10	DATE	DRG. No.
DRAWN			-
CHECKED			
APPROVED			REVISION: DATE