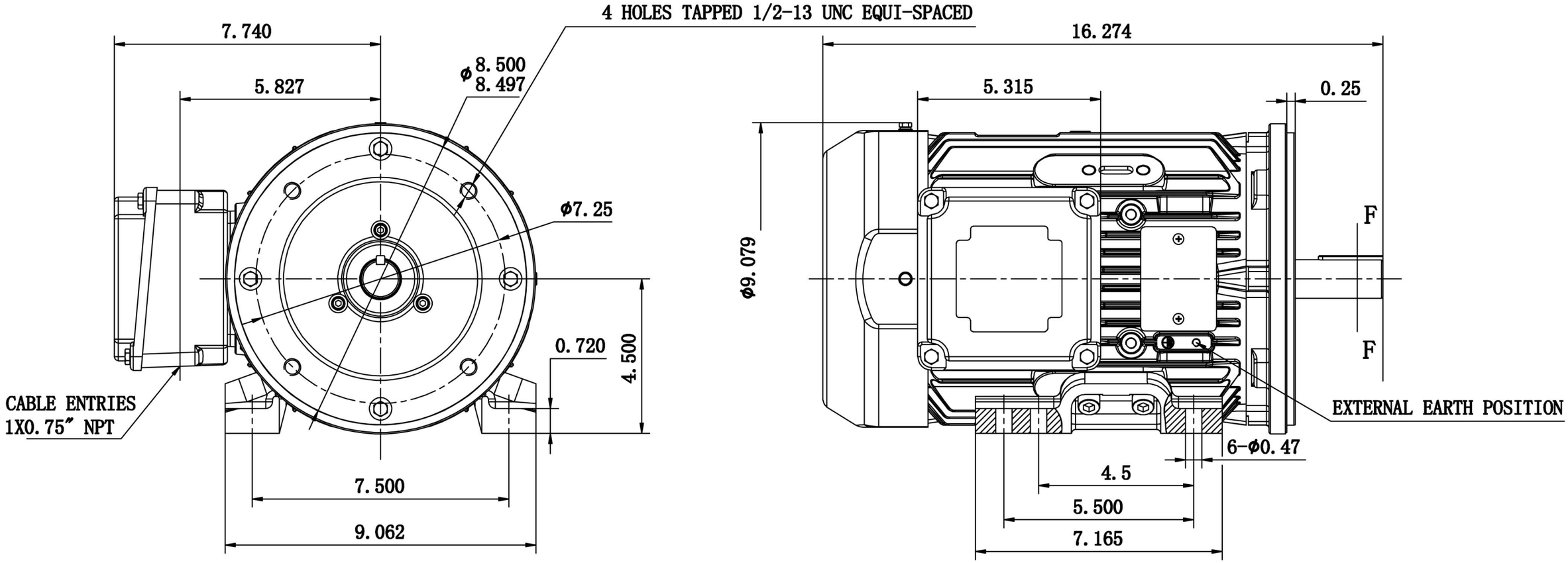

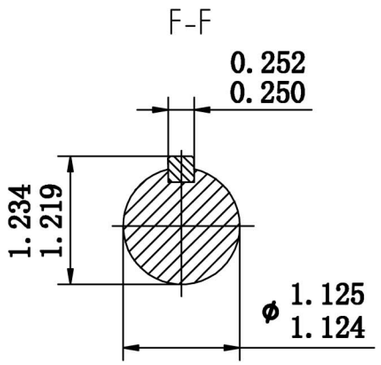

STANDARD TERMINAL BOX POSITION IS 9 O'CLOCK AS SHOWN.

CONDUIT ENTRIES:- TERMINAL BOX CAN BE ROTATED AT 90° INTERVALS

					WP-DF184-4T-VF4			1:3
						1	1	