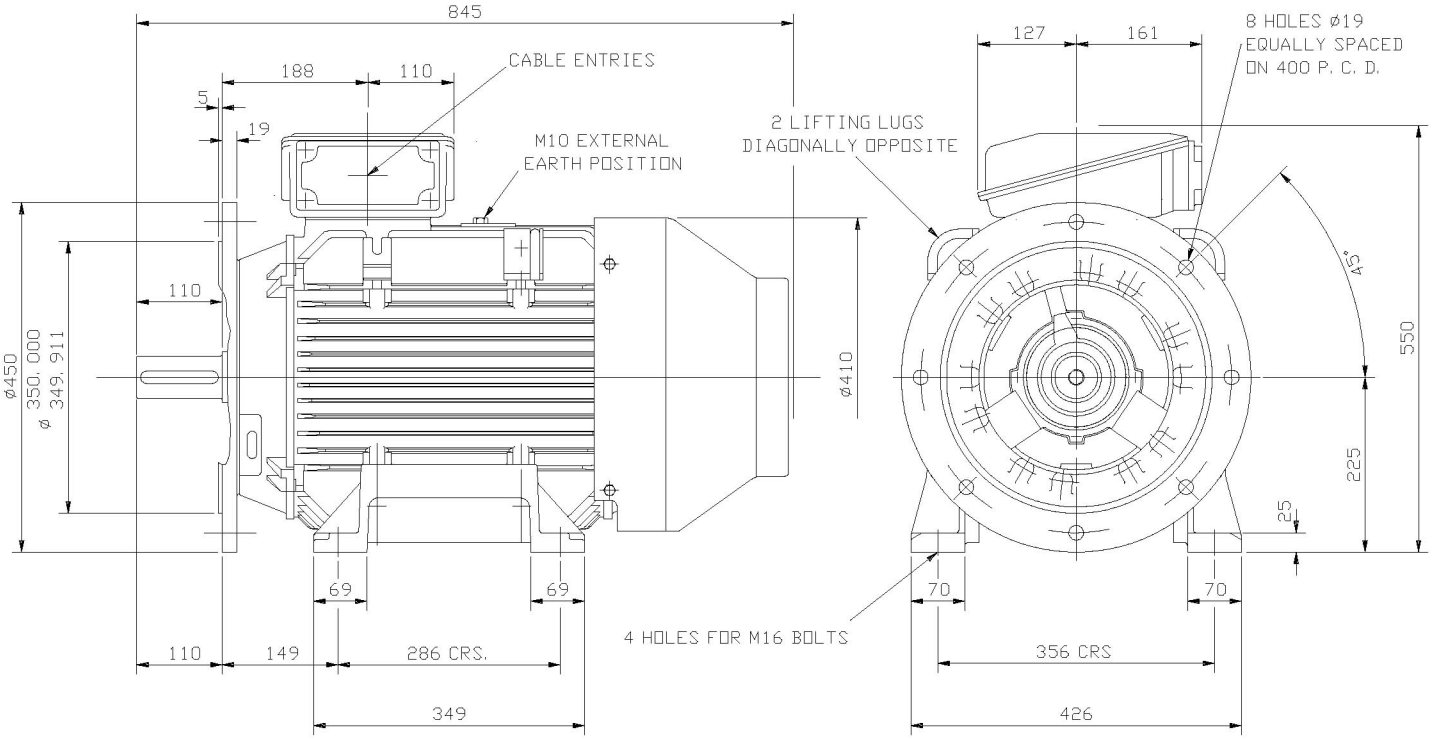

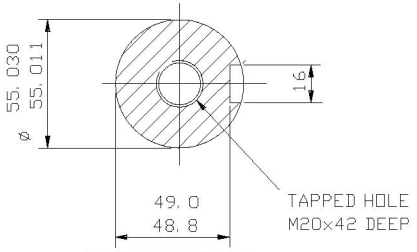

SECTION THROUGH
SHAFT EXTENSION
(SCALE 1: 2)

NOTE: –
TERMINAL BOX CAN BE SIDE MOUNTED
(LEFT OR RIGHT) BY REFITTING FEET
90° IN APPROPRIATE DIRECTION.
CABLE ENTRY CAN BE SUPPLIED IN
ANY ONE OF FOUR POSITIONS AT
90° INTERVALS.

CUSTOMER		
ORDER No.		
SERIAL No.		
FRAME SIZE		
kW	RPM.	
Hz	PHASE 3	
VOLTS	POLES	
BRGS.	DE.	NDE.
MOTOR NETT. WT.		Kg.
INSULATION CLASS		
TEMPERATURE RISE	°C	
DESIGN AMBIENT TEMPERATURE		°C
HEATER WATTS & VOLTS		
	WATTS,	VOLTS
REMARKS		

ALL DIMENSIONS IN MILLIMETRES

FIRST ANGLE
PROJECTION

BROOK
CROMPTON

NOTE !
2.5 ENDPLAY WILL BE PROVIDED FOR ENDTHRUST PROTECTION WHEN CUSTOMERS NOTIFY US OF THEIR INTENTION TO USE RIGID COUPLINGS AND DRIVEN MACHINES WITHOUT ENDPLAY.

OUTLINE DIMENSIONS OF STANDARD FOOT/FLANGE MOUNTED METRIC
TOTALLY ENCLOSED FAN VENTILATED.
FITTED WITH TOP MOUNTED TERMINAL BOX
FRAME SIZE : – W-DF225S-H (2 POLE)

SCALE	1:6	DATE
DRAWN		
CHECKED		
APPROVED		

REVISION:		DATE	