1AP.050.0533WXY

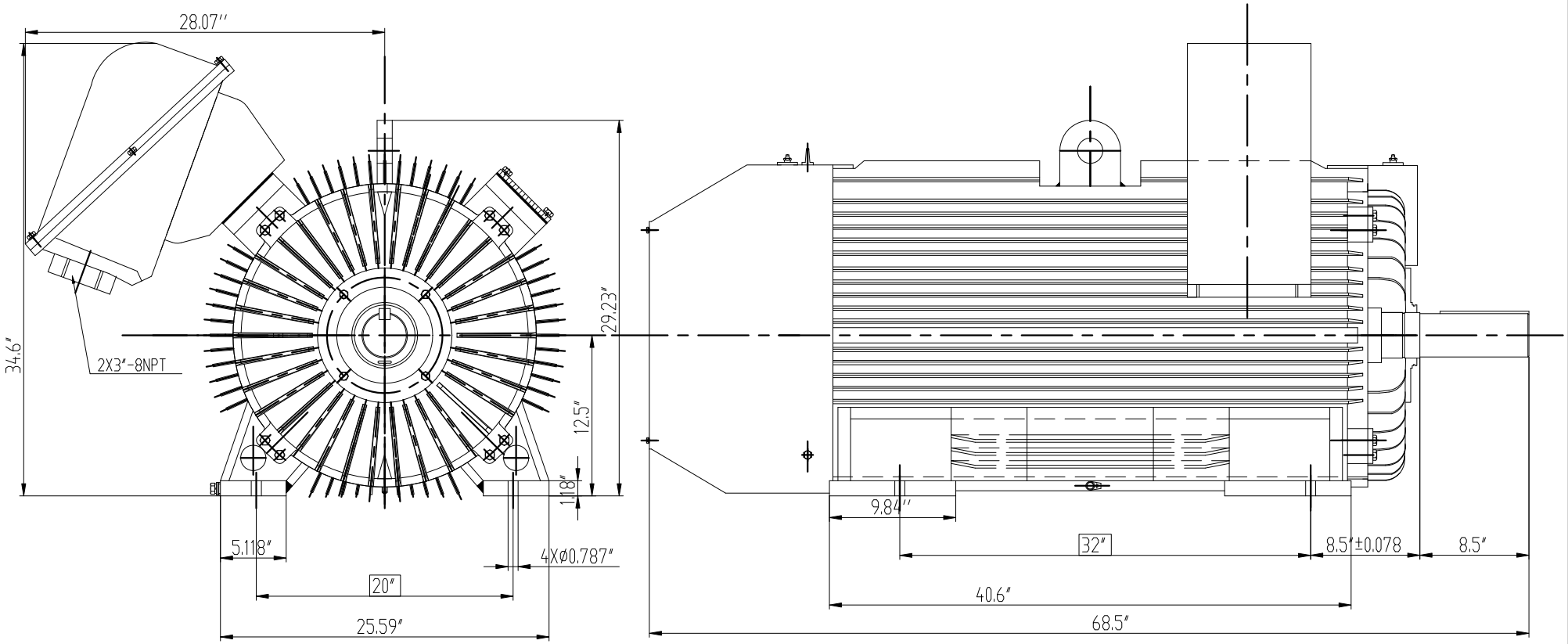

MODEL	ES	U	R	S	N-W	C
NSHE5009U-2 300HP	3.03''	2.625''	2.275''	0.625''	4.75''	1645
NSHE5009U-2 350HP	3.03''	2.625''	2.275''	0.625''	4.75''	1645
NSHE5009U-2 400HP	3.03''	2.625''	2.275''	0.625''	4.75''	1645
NSHE5011U-2 450HP	3.03''	2.625''	2.275''	0.625''	4.75''	1645
NSHE5011U-2 500HP	3.03''	2.625''	2.275''	0.625''	4.75''	1645
NSHE5009U-4 300HP	6.91''	3.375''	2.88''	0.875''	8.5''	1740
NSHE5009U-4 350HP	6.91''	3.375''	2.88''	0.875''	8.5''	1740
NSHE5009U-4 400HP	6.91''	3.375''	2.88''	0.875''	8.5''	1740
NSHE5011U-4 450HP	6.91''	3.375''	2.88''	0.875''	8.5''	1740
NSHE5011U-4 500HP	6.91''	3.375''	2.88''	0.875''	8.5''	1740
NSHE5009U-6 250HP	6.91''	3.375''	2.88''	0.875''	8.5''	1740
NSHE5009U-6 300HP	6.91''	3.375''	2.88''	0.875''	8.5''	1740
NSHE5011U-6 350HP	6.91''	3.375''	2.88''	0.875''	8.5''	1740
NSHE5011U-6 400HP	6.91''	3.375''	2.88''	0.875''	8.5''	1740
NSHE5009U-8 200HP	6.91''	3.375''	2.88''	0.875''	8.5''	1740
NSHE5009U-8 250HP	6.91''	3.375''	2.88''	0.875''	8.5''	1740
NSHE5011U-8 300HP	6.91''	3.375''	2.88''	0.875''	8.5''	1740
NSHE5011U-8 350HP	6.91''	3.375''	2.88''	0.875''	8.5''	1740

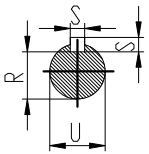

LET.	REVISION	BY	DATE

DESIGN	REN XIAOHUA
CHECK	XIE XIAOLONG
APPROVE	YU JIABIN
DATE	20170526

NSHE5000 MOTOR

F-1

1AP.050.0533WXY

WEIGHT	SCALE
	1:8

BROOK CROMPTON
Keeping Industry Turning